CONFIDENTIAL

# SRHP 75 300mm UPSTAND

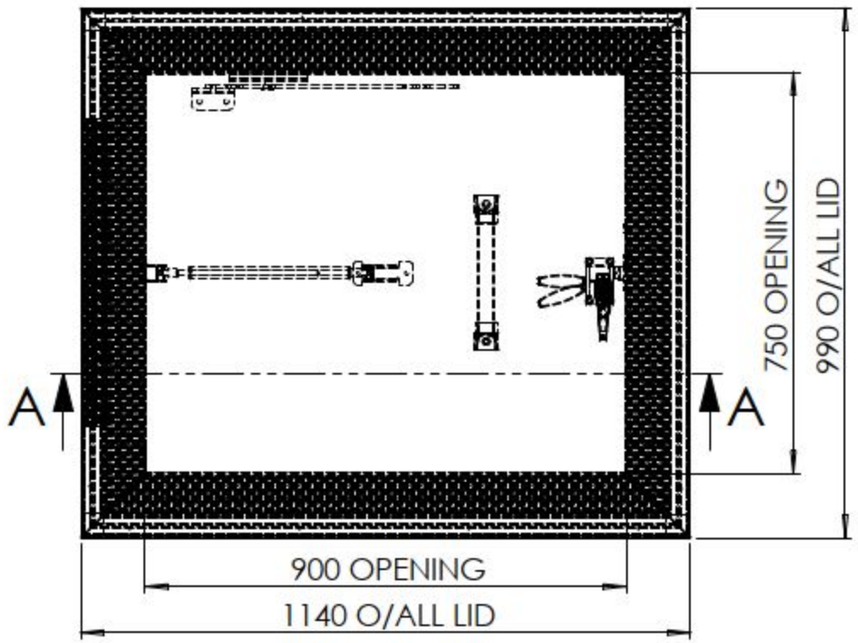


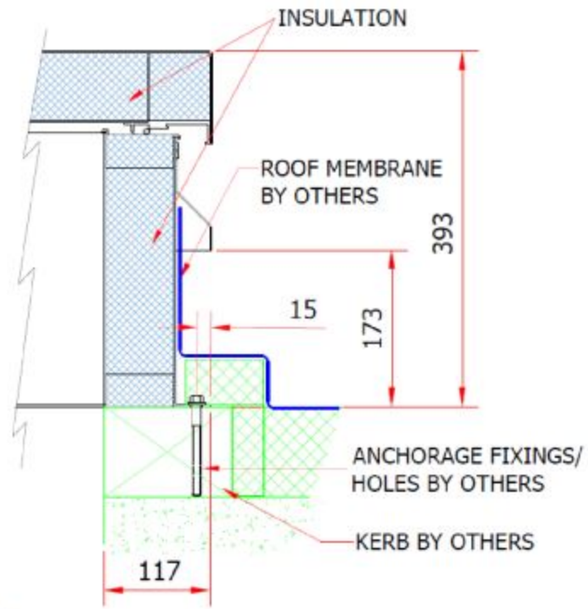


SRHP75
SIZE: 750 X 900 mm
UPSTAND HEIGHT: 300 mm
LOCKING OPTION: LO1 (INTERNAL CABLOCK)
**LO2 (PADLOCKABLE TOGGLE LATCH) &**
**LO4 (PADLOCKABLE EXT HANDLE)**
**INCLUDED AS STANDARD IF REQUIRED**
MATERIAL: ALUMINIUM
INSULATION: 75mm INSULATION

INTERNAL COLOUR: MILL FINISH
EXTERNAL COLOUR: MILL FINISH
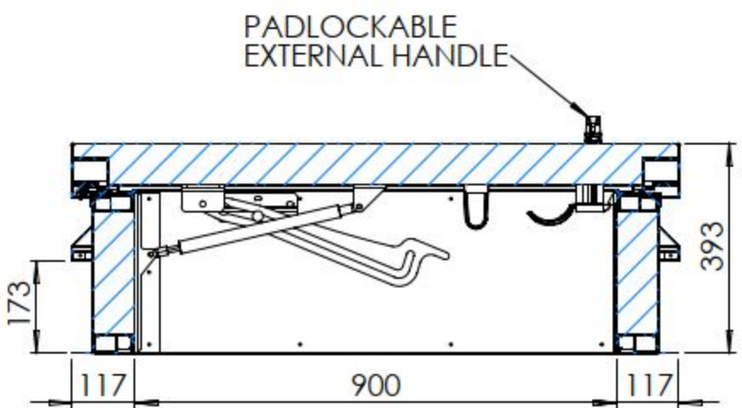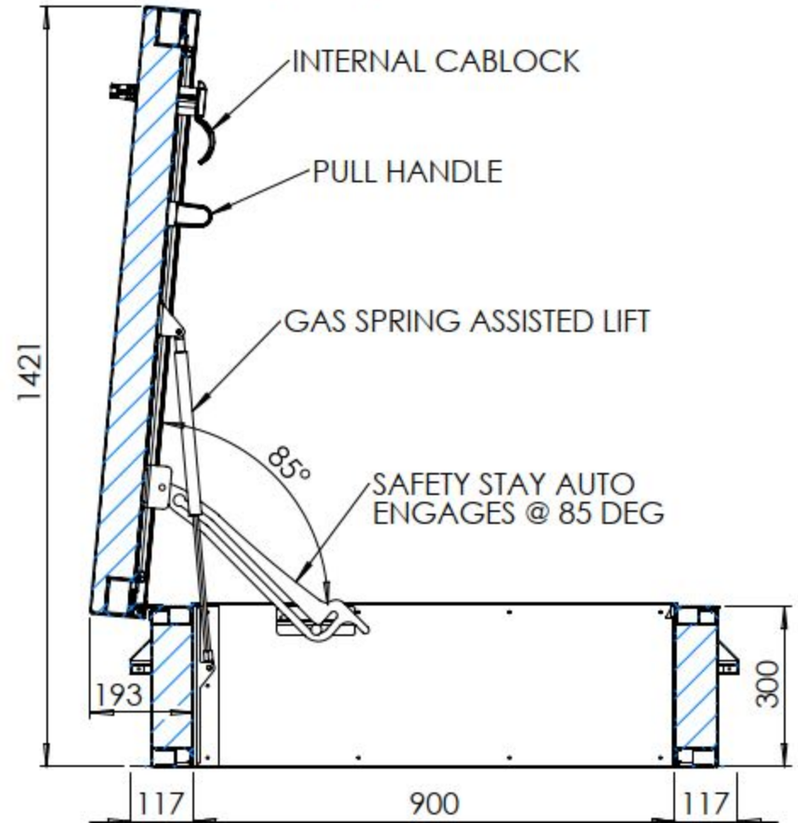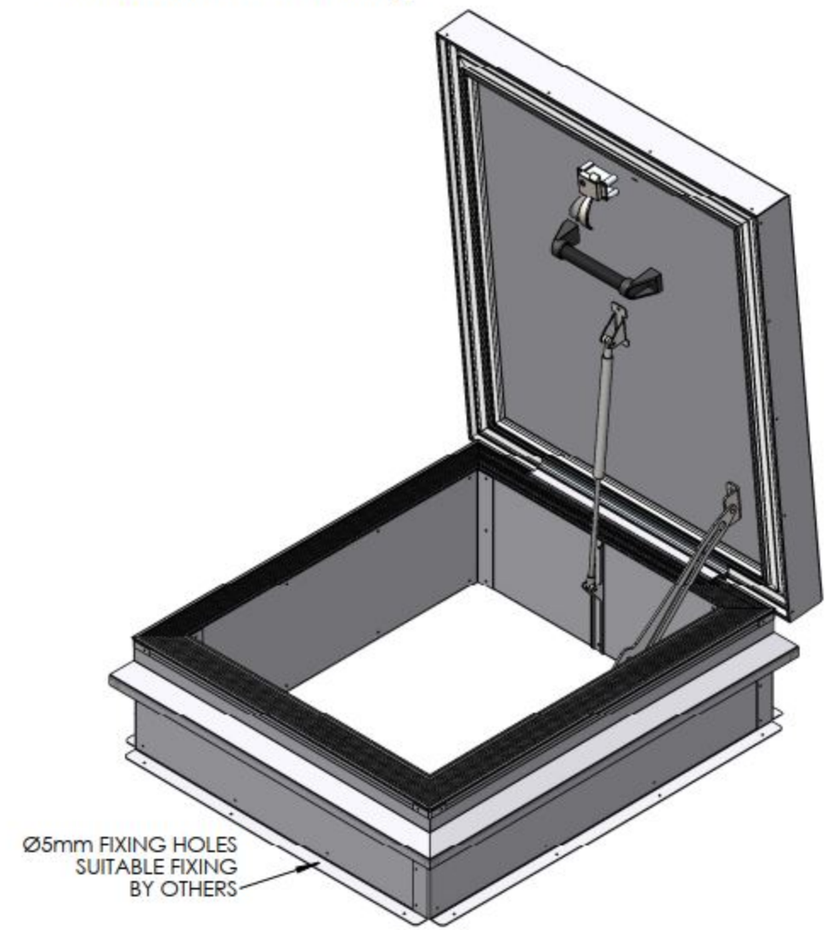
APPROX WEIGHT: 49kg